# WN64 Simple (4-in-1) Weather Outdoor Array

**Model: WN64**



https://s.ecowitt.com/3BTPTJ

# Table of Contents

1. Ecowitt System Introduction ..... 1

2. Instructions for Use ..... 2

2.1 Part List ..... 2

2.2 Sizes ..... 3

2.3 Overview ..... 6

3. Configuration and Mount ..... 8

3.1 Preparations ..... 8

3.2 Power up ..... 10

3.3 Pairing with a gateway/console ..... 11

3.4 View Online Data on Ecowitt APP ..... 12

3.5 Before you mount ..... 12

3.6 Assembling the Mounting Bracket ..... 13

4. Operation Guide ..... 16

4.1 LED Indicators ..... 16

4.2 Data Reporting ..... 16

5. Specifications ..... 17

6. Troubleshooting ..... 19

7. Features ..... 21

7.1 Key Features ..... 21

7.2 Core Difference ..... 22

8. Warranty ..... 23

9. FCC ..... 25

10. Battery Care and Maintenance ..... 27

11. Contact Us ..... 29

11.1 After-sales Service ..... 29

11.2 Stay in Touch ..... 30

# 1. Ecowitt System Introduction

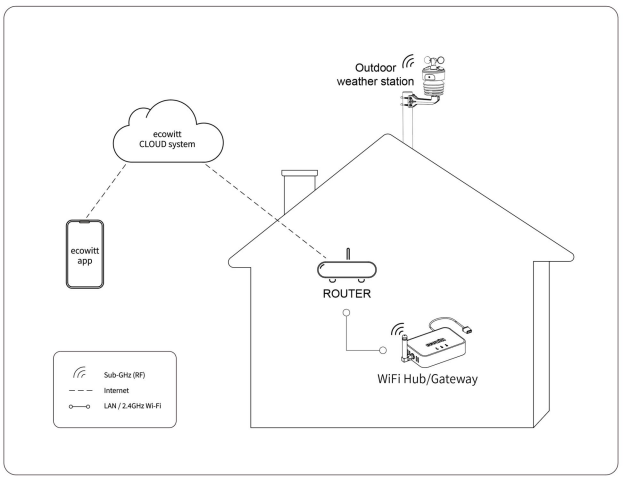


**Figure 1**

Thank you for purchasing the **WN64** Simple (4-in-1) Weather Outdoor Array.

Please note that this sensor cannot be used alone. The data can be transmitted via the Ecowitt Wi-Fi Gateway or displayed on a receiver console (sold separately). Once the Wi-Fi configuration is complete, the data can be viewed on the Ecowitt app or on the receiver console.

To ensure optimal product performance, please read this manual carefully and keep it for future reference.

We at Ecowitt are very conscientious about your possib le concerns regarding sending your data into a cloud. N ot only do we not share your data with any third party, we also offer you a possibility to manage your data loca lly by the help of a special tool- the WS View Plus app and Web UI. You may refer to t he WSView Plus APP instruction for more details.

## 2. Instructions for Use

### 2.1 Part List

| | |
|---|---|
| 1 x WN64 | 1 x User Manual |
| 1 x Base Bracket | 4 x φ4.8*32 Screws |
| 1 x Simple Wrench | 1 x M3*24 Screw |
| 1 x L-shaped Wrench | 1 x M3*12 Screw |
| 4 x Screw Sleeves | 2 x U-bolts |

**Table 1 Package Contents**

## 2.2 Sizes

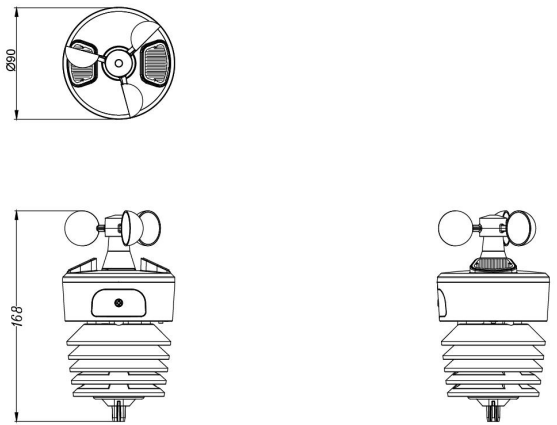


**Figure 2 Basic**

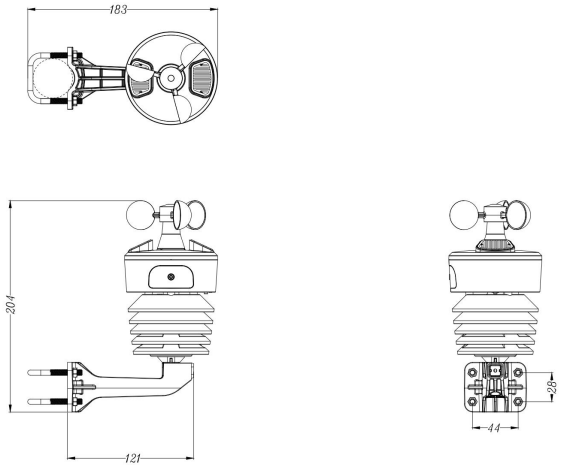


**Figure 3 Horizontal installation**

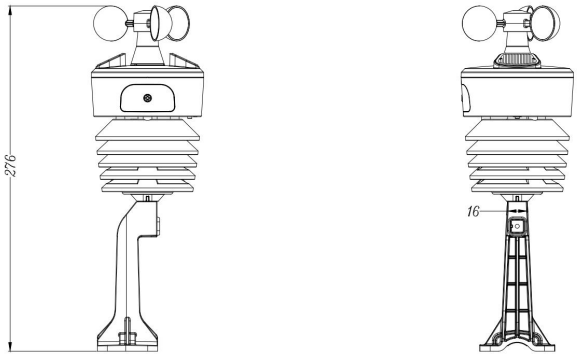


**Figure 4 Vertical installation**

## 2.3 Overview


Wind Cup
Rainfall Detection
Battery Compartment
Radiation Shield
Mounting Bracket

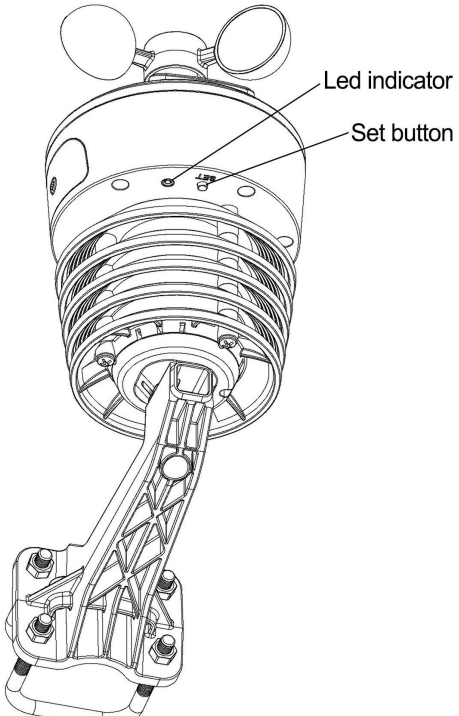


**Figure 5**

# 3. Configuration and Mount

## 3.1 Preparations

1. Open the package.

2. Preparing the **receiver (gateway or console)** to pair with the WN64.

### 3.1.1 Compatible Gateways/Consoles for WN64

You need to pair this device with the Ecowitt Wi-Fi Gateway or display consoles in order to view data on your Ecowitt app and receive email alerts on our weather server. Compatible models are listed in the table below.

| Console Model Name | Picture |
| --- | --- |
| GW1200 |  |
| GW2000 |  |
| GW3000 |  |
| HP2550/HP2560 |  |
| WN1820/WN1821 |  |
| WN1920/WN1980 |  |
| WS3800/WS3820 |  |
| WS3900/WS3910 |  |
| WS6210/WS6210S |  |

**Table 2**

## 3.2 Power up

| Battery Usage Warning | |
|---|---|
| **Correct Battery Installation** | Ensure the battery is inserted with the correct polarity. The system requires initial power from this backup battery to start up before the solar panel charges the accumulator and supplies system power. |
| **Cold Weather Considerations** | In high-altitude areas during winter, sunlight exposure is limited, and the system relies more on the backup battery. We recommend using lithium batteries for better performance in cold climates. |
| **Battery Type Recommendations** | Alkaline batteries can be used but should be avoided if the heater is activated. Rechargeable NiMH or NiCd batteries should not be used as they are not suitable for this system. |

**Table 3**

Use a screwdriver to open the battery compartment and insert 2 AA batteries. The LED on the back of the sensor will light up for 3 seconds and then blink every 11 seconds, If the LED does not light up for 3 seconds or does not blink as expected, press the "Set" button to restart the process.

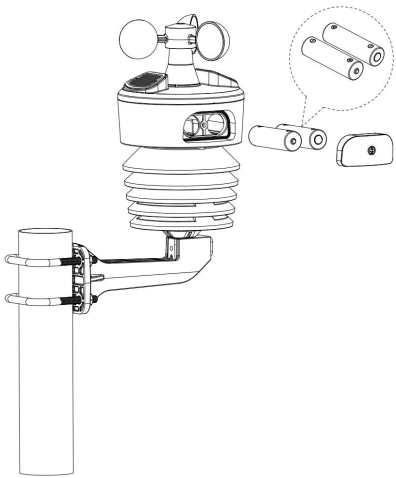

**Figure 6 Battery installation diagram**

## 3.3 Pairing with a gateway/console

### 3.3.1 Configure with Gateway/Console via the Ecowitt App

For details in this part, please refer to the manual of the gateway/console.

If Wi-Fi gateway has been in operation, and you have never had a weather sensor setup before, the sensor and Wi-Fi gateway will pick its data automatically.

1. Download the Ecowitt app from the App Store (iOS) or Google Play (Android).

2. Register an account or log in with your existing Ecowitt account.

3. Add your Ecowitt gateway device in the app.

4. Follow the in-app guide to search for and pair the WN64 sensor.

### 3.4 View Online Data on Ecowitt APP

When the Wi-Fi configuration is done, you can view the live data of your weather sensor on the Ecowitt app.

### 3.5 Before you mount

Selecting the right location is critical for accurate measurements.

- **Rainfall Detection：** Install in an open area where rainfall is unobstructed. Avoid locations under eaves, tree canopies, or covered patios.

- **Temperature & Humidity：** Avoid placing near heat sources such as vents, chimneys, or concrete walls that absorb and radiate heat.

- **RF Signal：** Ensure the installation location is within 100m (open field) of the gateway.

## 3.6 Assembling the Mounting Bracket

The bracket included in the package can be installed either horizontally or vertically. It is suitable for use on both horizontal crossbars and vertical round poles. **Compatible with poles with a diameter of 1.0 – 1.5 inches (pole not included).**

**1. Vertical installation**

As shown in the diagram, use four short screws to fix the bracket onto a horizontal rod. Attach the WN64 into the upper slot of the bracket, then secure it with a thin long screw.

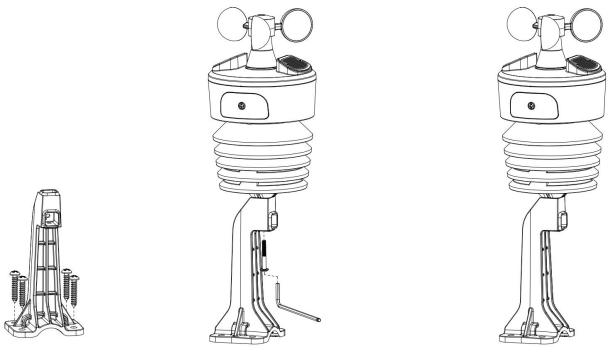

**Figure 7**

2. Horizontal installation

As shown in the diagram, use a hose clamp to fix the bracket onto a horizontal rod. Tighten it with a wrench (included). Attach the WN64 into the upper slot of the bracket, then secure it with a short long screw.

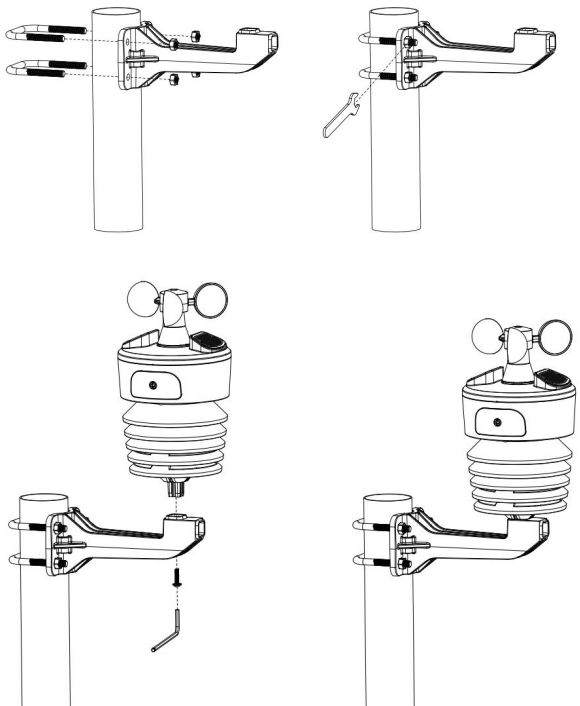

**Figure 8**

# 4. Operation Guide

## 4.1 LED Indicators

| Indicator | Meaning |
|---|---|
| Green blinking | Normal operation — data transmitting |
| Red blinking | Low battery or connection error |
| No light | No power — check battery installation |

**Table 4 LED Indicators**

## 4.2 Data Reporting

Once powered on, the WN64 automatically reports weather data every 11 seconds.

## 5. Specifications

| | |
|---|---|
| Model | WN64 |
| Name | WN64 Simple (4-in-1) Weather outdoor array |
| Dimensions | 168cm*90cm |
| Weight | 248g |
| Material of Plastic Casing | ASA+PC |
| Temperature Metering Range | -40°C to 60°C(-40°F to 140°F) |
| Temperature Metering Accuracy | ±1°C (± 1.8°F) |
| Temperature Metering Resolution | 0.1°C (0.2°F) |
| Humidity Metering Range | 1%RH to 99%RH |
| Humidity Metering Accuracy | ±5%RH |
| Humidity Metering Resolution | 1%RH |

| | |
|---|---|
| Wind speed Metering range | 0–50 m/s (0–112 mph) |
| Wind speed Metering accuracy | <10m/s, ±1m/s; ≥10m/s, ±10%m/s |
| Wind speed Metering resolution | 0.1m/s |
| Wind Metering Interval | 2s |
| Data reporting Interval | 11 seconds |
| RF Connection Frequency | 915/868/433MHz (depending on local regulations) |
| RF Wireless Range (in open areas) | Over 100 meters (330 ft.) |
| Operating Temperature Range | -40°C to 60°C(-40°F to 140°F) |
| Protection Rating | IP65 |
| Power Supply | 2*AA batteries(not included) |
| Battery Life | 1 year |

**Table 5 General Specifications**

| | |
|---|---|
| Rainfall Amount | Not supported |

**Table 6 Rainfall Detection**

## 6. Troubleshooting

Before consulting support, please check the following common issues and solutions.

| Issue | Possible Cause | Solution |
|---|---|---|
| No data on console/app | Batteries not installed correctly | Remove and reinsert batteries with correct polarity |
| | Out of RF range | Move gateway closer to the sensor (max 100m open field) |
| Red LED blinking | Low battery | Replace batteries promptly |

**Table 7 Troubleshooting**

**Q: Can the WN64 measure exact rainfall amount (mm/inches)?**

A: No. The WN64 detects rainfall status (yes/no). It is highly accurate for determining whether it is raining, especially

during light rain events. For precise rainfall accumulation data, a tipping bucket rain gauge is recommended.

**Q: How is the dual-electrode rain sensor different from traditional rain sensors?**

A: Traditional rain sensors use tipping-bucket or weighing mechanisms to estimate rainfall amount. The WN64 dual-electrode design detects whether it is raining and distinguishes between light drizzle and heavier rain — making it far more reliable for detecting "is it raining?"

**Q: What is ECOWITT's temperature compensation?**

A: Standard outdoor temperature sensors can give incorrect readings when exposed to direct sunlight. ECOWITT's patented temperature compensation algorithm dynamically adjusts readings to account for solar heating effects, providing more accurate ambient temperature readings even in sun-exposed installations.

**Q: How far can the WN64 be from the gateway?**

A: In open field conditions, the RF wireless range exceeds 100 meters (330 ft.). Walls, metal structures, and other obstructions will reduce effective range.

**Q: How long do batteries last?**

A: With normal use (data reported every 11 seconds), battery life is approximately 1 year. Extreme temperatures may shorten battery life.

**Q: Can I integrate the WN64 with Home Assistant?**

A: Yes. The WN64 is compatible with Home Assistant via the Ecowitt integration.

# 7. Features

## 7.1 Key Features

**High-Sensitivity Rain Detection** — Dual-electrode technology accurately detects rainfall status from the very first second of rainfall. The WN64 is particularly reliable for determining whether it is raining during light rain events.

**Temperature & Humidity Measurement** — Features ECOWITT patented temperature compensation algorithm, specifically effective in sun-exposed environments.

**Wind Speed Measurement** — Real-time wind speed tracking, updated every 2 seconds.

**RF Wireless Transmission** — Supports 915/868/433 MHz frequencies with over 100m wireless range in open areas.

**Low Power Consumption** — Powered by 2×AA batteries (not included), with up to 1 year battery life.

## 7.2 Core Difference

The WN64 uses advanced dual-electrode technology to detect whether it is raining with high sensitivity, allowing it to recognize rainfall conditions from the very beginning of a rain event.

However, the WN64 is designed for **rain detection rather than precise rainfall measurement** and does **not** calculate accumulated rainfall amount.

For applications requiring accurate rainfall accumulation data, such as irrigation management or detailed precipitation monitoring, a tipping bucket rain gauge (WH40H) is recommended.

# 8. Warranty

**According to simplified rolling sphere or cone protection concepts, the sensor must remain within the protected zone created by the air terminal.**

- **The 45° Coverage Principle:** The protection zone is defined by a 45° angle extending downwards from the tip of the air terminal.
- **Dynamic Placement Logic**

  · **Fixed Rod Height:** If the height of the air terminal is predetermined, the sensor must be moved horizontally closer to the mast to ensure it sits within the 45° protection cone.

  · **Fixed Sensor Position:** If the sensor's mounting location cannot be moved, the vertical height of the air terminal must be increased until the 45° slope extends far enough to fully cover the sensor housing.
- **Vertical Clearance (*h*):** The air terminal must extend above the highest point of the sensor by a height h. This value h is the critical reference for calculating the horizontal protection radius (at a 45° angle, the protection radius at the sensor's level is equal to *h*).

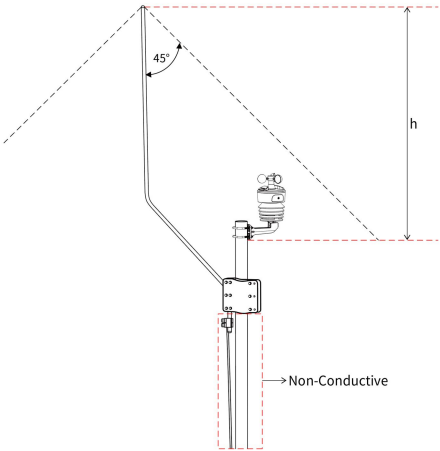


**Figure 9**

We disclaim any responsibility for any technical error or printing error or the consequences thereof.

All trademarks and patents are recognized.

We provide a 2-year limited warranty on this product against manufacturing defects or defects in materials and workmanship.

This limited warranty begins on the original date of purchase, is valid only on products purchased, and only to the original

purchaser of this product. To receive warranty service, the purchaser must contact us for problem determination and service procedures.

This limited warranty covers only actual defects within the product itself and does not cover the cost of installation or removal from a fixed installation, normal set-up or adjustments, or claims based on misrepresentation by the seller, or performance variations resulting from installation-related circumstances.

## 9. FCC

This device complies with part 15 of the FCC Rules. Operation is subject to the condition that this device does not cause harmful interference (1) this device may not cause harmful interference, and (2) this device must accept any interference received, including interference that may cause undesired operation.

Changes or modifications not expressly approved by the party responsible for compliance could void the user's authority to operate the equipment.

NOTE: This equipment has been tested and found to comply with the limits for a Class B digital device, pursuant to Part 15 of the FCC Rules. These limits are designed to provide

reasonable protection against harmful interference in a residential installation. This equipment generates, uses and can radiate radio frequency energy and, if not installed and used in accordance with the instructions, may cause harmful interference to radio communications. However, there is no guarantee that interference will not occur in a particular installation.

If this equipment does cause harmful interference to radio or television reception,

which can be determined by turning the equipment off and on, the user is encouraged to try to correct the interference by one or more of the following measures:

-- Reorient or relocate the receiving antenna.

-- Increase the separation between the equipment and receiver.

-- Connect the equipment into an outlet on a circuit different from that to which the receiver is connected.

-- Consult the dealer or an experienced radio/TV technician for help.

To maintain compliance with RF Exposure guidelines, This equipment should be installed and operated with minimum

distance between 20cm the radiator your body: Use only the supplied antenna.

IC Caution:

English:

This device contains licence-exempt transmitter(s) /receiver(s) that comply with Innovation, Science and Economic Development Canada's licence-exempt RSS(s). Operation is subject to the following two conditions:

1.This device may not cause interference.

2.This device must accept any interference, including interference that may cause undesired operation of the device.

## 10. Battery Care and Maintenance

When batteries of different brand or type are used together, or new and old batteries are used together, some batteries may be over-discharged due to a difference of voltage or capacity. This can result in venting, leakage, and rupture and may cause personal injury.

- Do not mix Alkaline, Lithium, standard, or rechargeable batteries.

- Always purchase the correct size and grade of battery most suitable for the intended use.

- Always replace the whole set of batteries at one time, taking care not to mix old and new ones, or batteries of different types.

- Clean the battery contacts and also those of the device prior to battery installation.

- Ensure the batteries are installed correctly with regard to polarity (+ and -).

- Remove batteries from product during periods of non-use. Battery leakage can cause corrosion and damage to this product.

- Remove used batteries promptly.

- For recycling and disposal of batteries, and to protect the environment, please check the internet or your local phone directory for local recycling centers and/or follow local government regulations

# 11. Contact Us

## 11.1 After-sales Service

Order Issues:

If you encounter any missing or incorrect shipments of Ecowitt products purchased, please reach out to the respective platform's customer service from the store where you bought the product for assistance.

Usage Inquiries:

Our product is continuously changing and improving, particularly online services and associated applications. To download the latest manual, and additional help, and for any issues related to product usage feel free to contact our customer support team at support@ecowitt.com. We are committed to providing assistance and resolving any concerns you may have.

## 11.2 Stay in Touch

Ask questions, watch setup videos, and provide feedback on our social media outlets. Follow Ecowitt on Discord, YouTube, Facebook and Twitter.



This product is protected by US Patent
US Patent No. 12,181,491B2.

Copyright © 2026 ecowitt All Rights Reserved. DC072926